Korea Technology and Information Promotion Agency for SMEs

(max 10 pages)

Technology Proposal for 2026 TIPA* International Joint R&D Program

(TIPA: Korea Technology and Information Promotion Agency for SMEs)

The objective of this Technology Proposal is to introduce the institute's proprietary technologies and present potential collaborative areas for Korean SMEs, facilitating joint research and development projects under the 2026 TIPA International Joint R&D Program. This Technology Proposal will be publicly disclosed in conjunction with the official announcement of the 2026 TIPA International Joint R&D Program.

1. Technology Proposer Information

Proposer	Name	Cudazzo, Markus	Email	Markus.Cudazzo@IPA.Fraunhofer.de
Institute Name	IPA			
Address	Nobelstrasse 12, 70569 Stuttgart, Germany			

2. Technology Overview

Title of Proposed Technology	*New, separator-free encapsulated powder application technology for coating small parts, considering health-critical respirable dusts, e.g. battery functional materials*			
Korea's 12 National Strategic Technology Fields	**Secondary Battery, Advanced Mobility, Advanced Robotics & Manufacturing, Others**			
Industrial Technology Classification [1]	**Technology Field 1** (Large Category)		**Technology Field 2** (Large Category)	
	Mechanical · Materials			
	Medium Category	Small Category	Medium Category	Small Category
	Surface Treatment	*Coating/ Method Technologies*		
Concept of Proposed Technology	*Small parts are usually coated in conventional powder coating systems, which include a 'full set' of powder spray booths with separators, usually powder recovery and temperature treatment. When processing materials that are hazardous to health, it cannot be ruled out that residual quantities of powder may escape to the outside, partly because neither filters nor cyclones are 100% effective at separation. In the proposed project, electrostatic application takes place in a closed capsule. An air-poor electrostatic fluidized bed is used as the spray unit. In order to avoid the need for filtration, the air supply for the application device is provided, for example, by a piston compressor or radial fan, with both the intake and discharge of air taking place in the capsule itself or in its immediate vicinity. The capsule is 'neutral' in terms of air flow, i.e. there is no pressure difference between the inside and outside of the capsule. The heat generated is compensated for, if necessary, by a cooling coil or by other means using a heat exchanger.*			

(max 10 pages)

Rationale for Joint R&D Project	*Electrostatic powder spraying (EPS), which was introduced into industrial coating technology in the mid-1960s as the most important powder coating process, generally requires thermosetting coating powders ("powder coatings") due to the nature of the process. Depending on decorative or functional requirements,ir operation of the ventilation systems, as no solvents need to be removed. For these reasons, there is a rapidly growing interest in powder coating systems in connection with increasing environmental requirements. In 2020 alone, powder coatings worth €322 million were produced in Germany (source: Statista).In addition, the EPS process recovers the powder that is not deposited on the workpiece due to electrostatic forces (overspray), despite high initial application efficiency, and reuses it in a closed-loop process. For particularly high functional quality requirements – e.g., for large vehicles – thick layers (sometimes in a 2-layer application) are applied, for example with intermediate baking or dust-on-dust, whereby both layers are heat-treated simultaneously.* *In the early days of electrostatic powder coating, it was mainly "white goods" (e.g., refrigerators) that were coated. The overspray powder was returned to the cycle via filter recovery. Material efficiency was very high, close to 100%. The properties of recycled powder differ from those of fresh powder. Therefore, a number of challenges had to be overcome in order to maintain consistent coating quality. This has been largely achieved through numerous detailed optimizations over the last few decades. However, the filter powder recovery concept was predominantly converted to a cyclone/end filter combination, which enabled color changes in the booth and thus met the increasing demand for individualization (color variety) in products. However, this concept results in powder coating waste in the end filter, namely in the form of fine powder particles that originate from losses in the cyclone.* *With powder coating processes in conventional continuous or batch mode, it is impossible to completely prevent powder dust (especially fine particles) from escaping from the cabin openings or other non-enclosed areas. For this reason, manual coaters now always wear fine dust masks when coating areas that are difficult for the automatic powder coating system to reach (e.g., Faraday cages), even though powder coating materials with acute toxicity are not usually used.* *Small parts to be coated are usually coated in conventional powder coating systems, which include a "full set" of powder spray booths with separators, usually powder recovery and temperature treatment. A few exceptions are, for example, the airless "quickcoating" technology based on the "Brennenstuhl" process for small parts and the coating of anchor packages with electro-insulating powder coatings over an electrostatic fluidized bed, a technology that has been significantly further developed at Fraunhofer IPA and has also been used on a pre-industrial scale for powder coil coating on an industrial scale (CRM Liege technical center in Belgium in cooperation with ArcelorMittal).* *However, even with the electrostatic fluidized bed technology further developed at Fraunhofer IPA, a ventilation system with appropriate filtering/powder recirculation is required, albeit with significantly lower extraction capacities and a much more compact design (e.g., DE 10 2007 062 064 B4).* *Since it cannot be ruled out that residual amounts of powder may escape to the outside, partly because neither filters nor cyclones have a 100% separation efficiency and the inlet and outlet areas for workpieces to be coated represent openings where powder escape cannot be prevented by purely flow-dynamic methods, commercially available powder coating systems are only suitable to a very limited extent for processing materials that are critical to health, such as dynamic methods, commercially available powder coating systems are only suitable to a very limited extent for processing materials that are critical to health, such as battery functional materials for the manufacture of electrodes for batteries.* *The proposed project aims to develop an encapsulated zero-waste powder coating process that requires little or no personal protective equipment, thereby significantly improving working conditions when handling dust and contributing to the humanization of the workplace.* *The challenges involved in constructing a demonstrator (prototype) of an encapsulated powder application technology are, on the one hand, that the energy input, for example through compressed air for atomization or fluidization of the powder and (at least partial) temperature treatment of the powder-coated surface, must be low. This can be achieved, for example, through thermal insulation and other structural measures. On the other hand, the air balance must be such that no dust filtration is required in a completely encapsulated design. This is the only way to ensure that no dust can escape to the outside.*

(max 10 pages)

	The collaboration between our research Institute and the company promotes the exchange of expertise, technologies, and best practices. This exchange of knowledge enables us to develop innovative solutions, scale up an initial laboratory setup to an industry-ready prototype, learn from each other, and increase the marketability of the new technology. The synergy of our expertise will enable us to address challenges more effectively and accelerate development. This joint research project on electrostatic powder coating in a closed capsule offers the opportunity to realize both technological and economic benefits. We are confident that through our collaboration, we can achieve significant advancements in this field. *In addition, the development of the "capsule" is too costly for Fraunhofer IPA to fund on its own. Therefore, an application has been submitted under the TIPA program, which, if approved, would enable a quick start if an interested company in Korea participates in the development work.*
Key Words	1. *Zero-Waste Powder Coating* 2. *Health-critical, respirable dusts handling and coating* 3. *Battery functional materials coating* 4. *Separator less recovery* 5. *Encapsulated powder coating booth*

3. Research and Development Objectives & Plan

Technology Readiness Level (TRL)	**Start of the Project**	Level (4-5)	**End of the Project**	Level (7)
R&D Objectives	*The proposed project is economically sustainable, as it involves an encapsulated zero-waste powder coating technology that achieves a material utilisation rate of almost 100%. Ecology and economy go hand in hand with the zero-waste concept, as the fine dust produced during powder coating ends up on the workpiece instead of in the lungs of employees, thus saving costs! No other visually and functionally high-quality powder coating process has been able to achieve this level of encapsulation to date.* *With conventional processes, it cannot be ruled out that residual amounts of powder escape to the outside during electrostatic powder coating, partly because the entry and exit areas for the workpieces to be coated are openings where powder escape cannot be 100% prevented using purely fluid dynamic methods.* *For this reason, manual coaters now always wear fine dust masks when coating areas are difficult for the automatic powder coating system to reach (e.g. Faraday cages), even though powder coating materials with acute toxicity are not usually used.* *Color change booths usually use cyclones, which have an efficiency of << 100% during cleaning and operation.* *Other powder coating processes, such as vortex sintering or the quick coating process described above, deliver significantly lower flow qualities in terms of visual appearance. Due to the significantly higher layer thickness fluctuations with these processes, material efficiency is low when the required minimum layer thicknesses are adhered to.* *Tests at Fraunhofer IPA have shown that good layer thickness uniformity can only be expected with good air flow, as is the case with electrostatic fluidized beds and even more so with conventional*			

	electrostatic powder spraying. These processes can only be used in an enclosed system if innovative, separator-free recovery is employed, as proposed in this project. *Only the proposed encapsulated technology allows high-quality electrostatic powder coating without fine dust accumulation in the smallest of spaces. Instead of bulky, energy-intensive and noisy extraction devices, the encapsulated technology requires only a fraction of the energy. In terms of social sustainability, the process is well suited to the humanization of workplaces. In contrast to conventional open systems, the capsule allows for good sound insulation. Personal protective measures are largely unnecessary, as no fine dust escapes from the capsule. Explosion-proof areas can be very well confined spatially, which also reduces protective measures and, in the best case, makes them superfluous.* *The innovative approach of encapsulated powder application technology makes it possible to no longer apply health-critical substances in the form of liquid coatings, as has been the case up to now, in order to make them easier for employees/coaters to handle. Health-critical materials (inhalable dusts) are then usually incorporated into a VOC-containing matrix with binding agent components (example: manufacture of electrodes for battery production). This makes them less critical to the health of the coater when handling them.* *The innovative process of encapsulated powder coating would be much more energy-efficient, as the VOCs in liquid coating have to undergo a temperature treatment process, often involving solvent recovery or combustion. The proposed innovative encapsulated powder coating process opens up a whole new market. The market for material- and energy-efficient and space-saving electrostatic powder coating is opening up for surfaces that were previously liquid coated for personal safety reasons.* *The trend towards humanizing workplaces when dealing with health-critical dusts will continue to spread in the coming years, which means that an expanding sales market for the development project can be expected due to its targeted ecological and resource-saving advantages.*
R&D Target Specifications	*Target performance specifications to be achieved through this R&D project:* *• Optimization of parameters such as voltage, current limitation, aerodynamic properties.* *• Increase in material efficiency and reduction in space requirements.* *• Energy-efficient system without a compressed air network, reduce energy costs by 80%* *• Fast color or material changes in less than 5 minutes instead of currently ~20 min* *• Application efficiency linked with material efficiency of close to 100%.* *• Variable layer thickness depending on powder particle size and application parameters between 10 and 1000 µm.* *• Creation of a functional prototype to confirm the function.*

R&D Plan

		Q: quarter (designed for 3 years)											
WP	Overall task	Q1	Q2	Q3	Q4	Q5	Q6	Q7	Q8	Q9	Q10	Q11	Q 12
1	Selection, specification, and provision of suitable materials, and components for the construction of the capsule and application technology, substrates and powder coatings												
2	Construction of an initial capsule test facility with the components selected and narrowed down in WP 1												
3	Aerodynamic and electrostatic simulations												

(max 10 pages)

4	Further development of the capsule in terms of safety in conjunction with the application technology												
5	Development of the capsule into a demonstrator												
6	DoE with the different test variants												
7	Endurance tests with the demonstrator and presentation of results												

Risk WP 1:

The most critical component is the air supply for small quantities, for example via a piston compressor. It is not certain that a cost-effective compressor can be found for continuous operation that is also explosion-proof and generates only very small amounts of heat so that the capsule does not heat up.

Minimization:

From the outset, it should be expected that an explosion-proof motor from the Fraunhofer IPA electrical workshop may be integrated. A high-quality motor should significantly improve the compressor's continuous operation capability. As far as heat input is concerned, the compressor can be located outside the capsule. A simple heat exchanger or air or water cooling may be used to minimize air heating during compression. Since the differential pressures to be overcome, for example in the fluidized bed, are only a few hundred Pa to approx. 1000 Pa, the heat input may not be very high if the compressor is designed with the aid of calculations and simulations.

Milestone linked with WP1:

The selection and narrowing down of suitable materials, semi-finished products, and components for capsule construction and integrated application technology, as well as the pre-selection of suitable substrates and powders, created the conditions for the construction of an initial preliminary stage of a capsule test facility.

Risk WP 2:

The structural dimensions of the capsule in conjunction with the aerodynamic and electrostatic characteristics cannot be sufficiently coordinated, meaning that flow-related and electrostatic disturbances are unavoidable.

Minimization:

Selecting a base capsule with the largest possible dimensions in conjunction with miniaturized application components, including their peripherals, facilitates the coordination of the characteristics. Accompanying simulations can ease the challenge of scaling to larger dimensions and significantly minimize the risk of failure in this AP.

Milestone linked with WP2:

The capsule test facility is basically ready for operation following initial commissioning tests and explosion protection measures.

Risk WP 3:

Aerodynamic and electrostatic simulations do not match the measured data and cannot be scaled adequately.

Minimization:

Thanks to the powder application technology group's many years of experience in the field of electrostatic simulation and flow simulation, the risk in this area is manageable. Some algorithms that have not yet been implemented in Fluent, such as spray-back effects, do not necessarily have to be processed in a simulator, but can also be investigated experimentally. In this respect, the risks in this AP are manageably low.

(max 10 pages)

Milestone linked with WP3:

CFD models for simulating aerodynamic and electrostatic forces provide the basis for safety-related and other further developments.

Risk WP 4:

The concept presented in AP 1-3 may need to be fundamentally revised due to unexpected difficulties in complying with safety precautions. This applies in particular to explosion protection in a chamber without the usual powerful extraction system used in state-of-the-art technology.

Minimization:

The risk can be minimized in particular by focusing on the problem at an early stage, especially in AP 1 and 3. Even before the capsule is redesigned in terms of safety, components and materials must be selected in such a way that unexpected difficulties are reduced to a minimum. The high-voltage generator and compressor can be tested in advance for possible spark discharges, and the peripherals (e.g., grounded workpiece to be coated) can be included at an early stage, at least to some extent, in preliminary tests and theoretical considerations using scaled models.

Milestone linked with WP4:

The further developments based on simulation results, together with the other preliminary work, provide the necessary prerequisites for setting up a production-like demonstrator.

Risk WP 5:

Selected materials, components, and attachments are not suitable for ensuring the tightness of the capsule or explosion protection. Powder dusts cannot be returned to the capsule without a separator, as this would damage the compressor, for example.

Minimization:

This risk must be taken into account as early as AP 1 so that fallback solutions can be included from the outset. These are not only fallback solutions but also increase the variety of options. For example, different solutions could be found for health-critical dusts than for less critical materials. The same applies to explosion protection, where different solutions can be proposed for non-explosive dusts than for explosive materials.

Milestone linked with WP5:

The demonstrator of the capsule for small parts coating using the electrostatic fluidized bed and for coil coating processes using powder airbrush technology provides a suitable basis for conducting extensive test series with reproducible test results.

Risk WP 6:

The tests show that the quality of the capsule (e.g., tightness) is not sufficient for industrial use.

Minimization:

Various types of sealing rubber are tested and preselected in advance. Various types/shapes of magnets are also preselected (cf. refrigerator seal). If this does not achieve sufficient tightness, a slight vacuum can be used to support the process by adjusting the flow conditions in the capsule. For this purpose, a pressure sensor is installed in the capsule, which will increase the tightness as a sensor for a control loop with an actuator to be defined (if not the compressor used for the air supply of the application technology itself).

Milestone linked with WP6:

(max 10 pages)

	The comprehensive DoE carried out with the demonstrator provides a suitable basis for long-term testing with it. ***Risk WP 7:*** *Long-term durability of the system is insufficient; aging may only become apparent in this AP, which is not yet an issue during short periods of use. In particular, the tightness of the capsule could deteriorate, but the mini compressor may also not be well suited for continuous operation.* ***Minimization:*** *A slight air flow to the capsule door may be necessary to keep the seals free of dust. If the compressor is not capable of continuous operation, a miniaturized radial fan can also be used in this case.* ***Milestone linked with WP7:*** *The validation of long-term functionality by means of endurance tests provides a suitable basis for creating operating instructions for the technology: Completion of the project.*

4. R&R (Roles and Responsibilities)

Expected R&R of Research Institute	*The theoretical knowledge required to develop encapsulated powder application technology can be used at Fraunhofer IPA to perform simulations of thermodynamic and fluid mechanical processes. Based on the simulations and initial rough CAD drawings, draft designs for the new technology are first created. The simulations are designed to enable a balanced air and temperature balance. The electrostatic powder separation process is also developed in Fluent simulations under the environmental conditions of the "capsule." A safety concept for minimizing ignition and explosion hazards is developed and implemented using suitable measurement technology available at Fraunhofer IPA. This specialist knowledge is available in the Powder Application Technology Group of the Coating Systems and Painting Technology Department thanks to numerous Fraunhofer IPA projects in the context of prototype construction (construction of various coaters). This results in simple test setups on a pilot plant scale. These are used to carry out tests as part of a design of experiment (DoE) and to define target values. ALPU builds on the theoretical preliminary work carried out by Fraunhofer IPA, initial simple test setups, and preliminary test results.*
Expected R&R of Korean SME Partner	*Based on the results of modeling and simulations, as well as the initial rough CAD sketches and preliminary test results from Fraunhofer IPA, the work of the interested Korean company will continue. For example, this company has the task of building prototype-like demonstrators of an encapsulated powder application technology and conducting accompanying coating tests with it or with a preliminary variant. It will develop the rough CAD sketches from Fraunhofer IPA into detailed drawings. A demonstrator will be built based on these drawings. Safety aspects (including explosion protection) will also be taken into account, based on the experimental results from Fraunhofer IPA and its design proposals in collaboration with the Korean company.*

5. Expected Outcomes/Impact

Expected Outcomes and Impact	*In order to require no or only minimal filtering, the air supply for the application device is advantageously provided by a modified piston compressor, which eliminates the need for vibration to support the fluidization of the powder, as pulsating air performs this task. A side channel compressor or other types of compressor are also possible, in which case a vibrator should be provided as an option for media that are difficult to fluidize and investigated as part of the proposed project, with both the intake and discharge of air taking place in the capsule itself. On the one hand, the compressor can be located directly in the capsule, because the energy requirement is so low that there is no risk of the capsule heating up. In this case, the power supply would only be provided via a well-sealed opening, or a battery-powered compressor would be used, in which the battery can be replaced and recharged during one of the material changes. In another variant, as shown in the illustrations, the compressor is located on the periphery of the capsule. The air is supplied and removed via an opening.*

(max 10 pages)

Externally, the capsule is "neutral" in terms of air flow, i.e., there is no pressure difference between the inside and outside of the capsule. The heat generated is balanced by a cooling coil or other means using a heat exchanger. An electrostatic fluidized bed can be used as a spray unit. A prerequisite for the use of the electrostatic fluidized bed is the use of a powder that can be easily fluidized. There are restrictions, particularly with regard to the geometry of the workpiece, especially if it is to be coated evenly on all sides.

As far as the high-voltage generator is concerned, there are also various options for integrating it. It can be located outside the capsule, with the high-voltage cable fed into the interior of the capsule via a well-sealed opening. Alternatively, only the control unit can be located outside the capsule, with a low-voltage cable fed into the capsule. In this case, the high-voltage cascade is located inside the capsule or implemented in the electrostatic fluidized bed.

The temperature treatment is carried out using the "quick coating process" familiar in Germany, i.e., the state of the art for this type of small parts coating outside the capsule. Optionally, the temperature treatment can also be carried out inside the capsule if it is very well insulated and equipped with a heat exchanger (no longer part of this project).

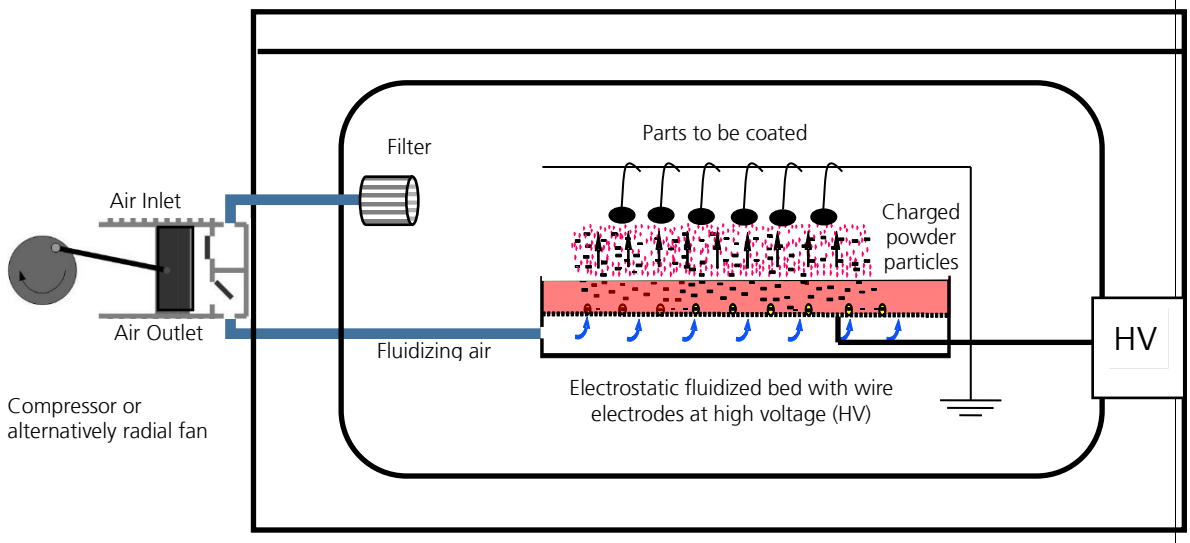

Fig.: Separator loosely encapsulated powder application technology using the example of small parts coated using an electrostatic fluidized bed (HS: high-voltage generator)

(max 10 pages)

6. References

Compact and efficient powder coating processes:

[1] Strohbeck, Ulrich; Cudazzo, Markus; Pulli, Karlheinz; Vogelsang, Harald: Die Pulverlackiertechnik mit ihren Ansatzpunkten zu energie- und materialeffizienten Lösungen – ein Überblick; In: Erstes Prozesstechnik-Forum der Energieeffizienz-Netzwerke – Effiziente Pulverlackierung 22.11.2012 Frankfurt am Main

[2] Landwehr, I.; Pulli, K.; Cudazzo, M.: „*Neue Pulverapplikationstechnik für neue Pulverlackmärkte*“, JOT Journal für Oberflächentechnik“, Jahrgang 57, 2017, Nr. 8, Seite 16-19.

Dry coating in battery manufacturing::

[3] Cudazzo, Markus; Landwehr, Inga (2015): Ressourceneffizient lackieren mit innovativen Prozessen. Pulverbeschichtung revolutioniert die Batterieherstellung: Neues Verfahren zur Elektrodenbeschichtung bietet erhebliche Umwelt- und Kostenvorteile. In: besser lackieren. Jahrbuch 2016 73., S. 242–246.

[4] Inga Landwehr; Markus Cudazzo: Powder coating for supercapacitor electrode manufacturing. 5th Interantional Symposium on Enhanced Electrochemical Capacitors.

Blasting processes as an alternative pretreatment method in the context of efficient powder coating processes:

[5] S. Khorasanizadeh: The Effects of Shot and Grit Blasting Process Parameters on Steel Pipes Coating Adhesion, World Academy of Science, Engineering and Technology, Band 66 Juni 2010

[6] Timmermann, Ernst-Hermann: Strahlen als Vorbehandlungsprozess vor der Lackierung, JOT 7 / 18 S. 36-38

Microencapsulated liquids, basic research in the context of efficient powder coating processes:

[7] LIP “Liquids in Powder“ (CORNET-Projekt), koordiniert von der Forschungsvereinigung für Pigmente und Lacke (FPL e.V.) und gefördert durch die AiF (186 EN/EN03226/16).

[8] A.C. Boualia, M. Serdechnova, C .Blawerta, J. Tedim, M.G.S. Ferreira, M.L. Zheludkevichac, Layered double hydroxides (LDHs) as functional materials for the corrosion protection of aluminum alloys: A review, Applied Materials Today, Vol. 21, December 2020, 100857.

Basic research for decentralized factory processes with a focus on electrostatic powder coating:

[9] Frank, Gernot; Böck, Jochen; Westkämper, Engelbert; Schlögl, Wolfgang: A continuous method for integrating non-conventional technologies into existing production-lines from concept to resource; In: Costa, Sergio E. Gouvea da (Conference Chair); The International Foundation for Production Research: Challenges for Sustainable Operations: 22nd International Conference on Production Research, July 28 - August 1, 2013 in Iguassu Falls, Brazil. Foz do Iguaçu, Brazil, 2013, 8 S

[10] Böck, J.: Methode zur Integration nicht-konventioneller Verfahren in flexible Fertigungs- und Montagelinien; Dissertation am Institut für industrielle Fertigung und Fabrikbetrieb der Universität Stuttgart, 2013

Patents for electrostatic powder coating:

[11] Cudazzo, M.; Strohbeck, U.; Casu, S.; „*Elektrostatische Fluidisierungsvorrichtung und elektrostatisches Fluidisierungsverfahren zur Beschichtung von Substraten mit Beschichtungspulver*“; DE 10 2004 010 177 B4; 13.09.2007

[12] Cudazzo, M.; Husta, J.; Hager, C.; „*Verfahren und Fluidisierbehälter zur Verbesserung der Aufladung von Pulverpartikeln mittels neuer gepulster Hochspannungstechnik*“; DE 10 2008 007 219 B4; 18.02.2010

[13] Cudazzo, M.; Scherrrmann, A.; „*Elektrostatisches Beschichtungsverfahren und elektrostatische Beschichtungsvorrichtung*“; DE 10 2009 020415 B4; 28.04.2016

[14] Franz, J.; Cudazzo, M.; „Einstellbarer Hochspannungswiderstand“; DE 10 2012 007 240 B4; 20.03.2014

[15] Cudazzo, M.; „*Pulverbeschichtungsvorrichtung mit platzsparender Absaugvorrichtung für Overspraypulver*“; DE 10 2007 062 064 B4; 21.05.2015

Patents for dry coating in battery manufacturing:

[16] Cudazzo, M.; Märkle, W.; „*Verfahren und Vorrichtung zur Herstellung einer Elektrode*“; DE 10 2013 221 162 B4; 16.11.2017

[17] Cudazzo, M.; Lenz, A.; Landwehr, I.; „*Elektrostatische Fluidisierungsvorrichtung und Verfahren zur Pulverbeschichtung eines Substrats*“; DE 10 2016 212 610 B4; 01.04.202